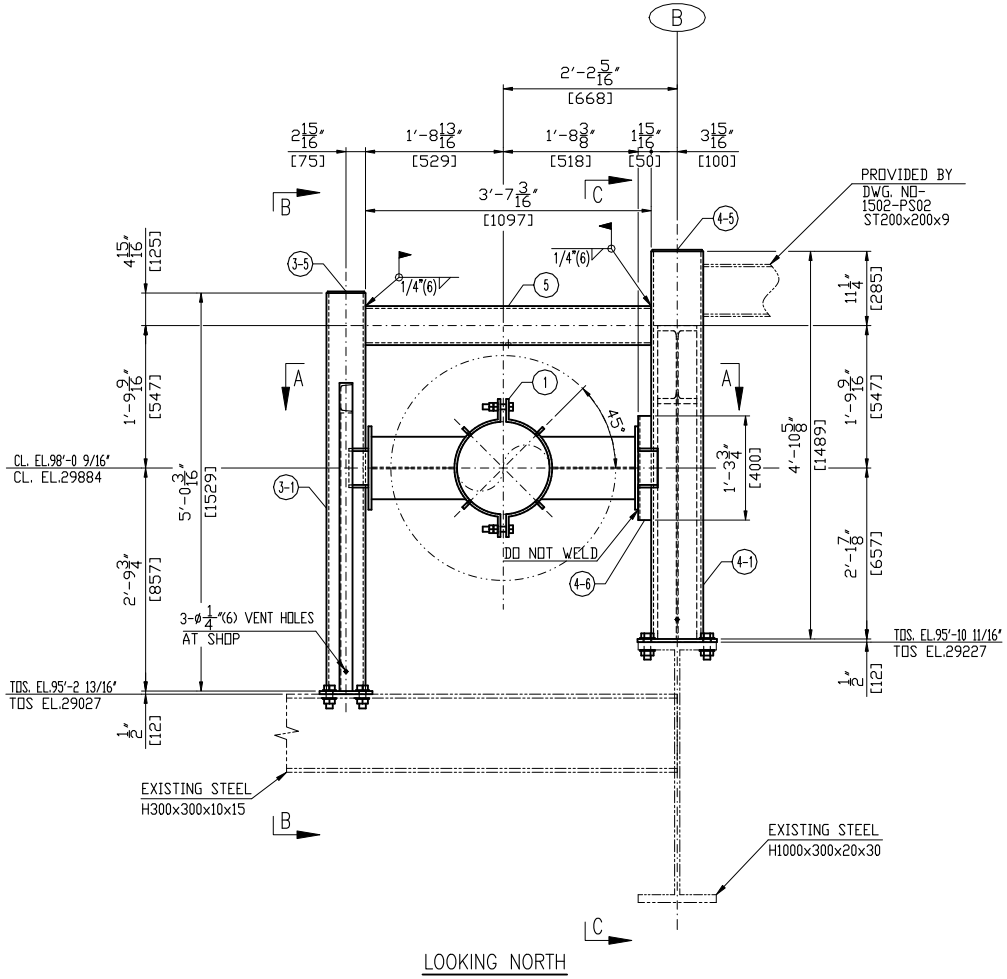

LOOKING NORTH

Revision History

Rev	Description	Date	Drawn / Checked By Approved By
–	INITIAL ISSUE	2026-01-21	Drawn J.B.HONG Checked By T.H.KIM Approved By B.L.CHOI

BILL OF MATERIAL — TOTAL WEIGHT : 854.8 LB — SELECTION NO. 1501 — AREA LEFT

ITEM	DESCRIPTION	TYPE OR SIZE	LENGTH(mm)	LENGTH(IN)	QTY.	MATERIAL	WEIGHT(LB)/UNIT	WEIGHT(LB)/TOTAL	REMARK
1	PIPE CLAMP	PCSDA-350-518			1	A387-22		178.13	NOTE #2
2	CHANNEL	C150x75x6.5x10	75	2.95	4	A36	3.08	12.32	NOTE #3
3-1	SQUARE TUBE(1-I6)	ST150x150x9	1529	60.20	1	A500 Gr.B		128.77	NOTE #3
3-2	CHANNEL	C100x50x5x7.5	2366	93.15	1	A36		48.82	NOTE #3
3-3	PLATE(4-I27-SLOT33)	PL12x203x305			1	A36		12.86	NOTE #3
3-4	PLATE(4-I27-SLOT33)	PL12x200x305			1	A36		12.67	NOTE #3
3-5	COVER PLATE(4-R14)	PL6x141x141			1	A36		2.06	NOTE #3
4-1	SQUARE TUBE(1-I6)	ST200x200x9	1489	58.62	1	A500 Gr.B		171.68	NOTE #3
4-2	H-BEAM	H150x150x7x10	1390	54.72	1	A36		96.53	NOTE #3
4-3	PLATE(4-I27-SLOT33)	PL12x305x457			1	A36		28.95	NOTE #3
4-4	PLATE(4-I27-SLOT33)	PL12x254x406			1	A36		21.42	NOTE #3
4-5	COVER PLATE(4-R14)	PL6x191x191			1	A36		3.79	NOTE #3
4-6	CHANNEL	C150x75x6.5x10	400	15.75	1	A36		16.40	NOTE #3
5	SQUARE TUBE(1-I6)	ST150x150x9	1097	43.19	1	A500 Gr.B		92.38	NOTE #3

PIPING INFORMATION

PIPE SIZE (IN): 14 — PIPE MATERIAL: A335-P92

ISO NO.: 1501 — OPER. TEMP (F): 1089 — INSULATION (IN): 10

SUPPORT NUMBER	SUPPORT COORDINATES X	Y	Z	DESIGN LOADS (KIPS) X	Y	Z	DESIGN MOVEMENTS (IN) X	Y	Z
1501-PS02	32'-9 11/16'	0	98'-1'	3. 347	3. 1	0. 91	-0. 44	-0. 09	0. 41
	10000	0	29896						

"Z" UP, "Y" NORTH, "X" GAS FLOW EAST

HANGER SETTING DATA(EACH)		TOTAL TRAVEL	- IN
SPRING LOAD	- KIPS	THERMAL MOVEMENT	- IN
HOT LOAD	- KIPS	SPRING RATE	- LB/IN
COLD LOAD	- KIPS	VARIABILITY	- %

UNIT NO.: 11

NOTES:

1. PIPE SUPPORT SHOP ATTACHMENTS, GENERAL NOTES, WELD & PLATE DETAILS 1635572-D1S0-3800
2. THIS ITEM WILL BE SUPPLIED BY ENGINEERED PIPE SUPPORT SUPPLIER.
3. THIS ITEM WILL BE SUPPLIED BY STEEL SUPPORT FABRICATOR.
4. PIPE ATTACHMENTS THAT ARE SHOP WELDED ONTO THE PIPE ARE SUPPLIED BY THE PIPE FABRICATOR.
5. BILL OF MATERIAL SHOWN ARE FOR ONE (1) SUPPORT, THERE IS ONE (1) SUPPORT PER UNIT
6. REFER TO DRAWING 1635572-D2S0-3801~3804 FOR TYPICAL SHOP WELDED CONNECTION DETAILS NOT SPECIFIED ON THIS DRAWING.
7. FF* : 1 15/16(50)mm FIELD ADJUST
8. THIS ITEM WILL BE SUPPLIED BY CUSTOMER.

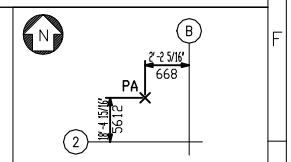

KEY PLAN

ISOMETRIC VIEW

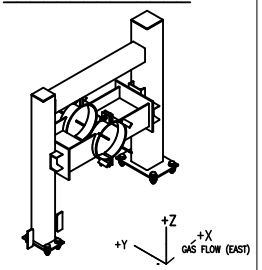

NLR
Copyright© GE Vernova and/or its affiliates 2026
All rights reserved. The information herein is proprietary information of GE Vernova and/or its affiliates. Thus, it is being provided with the explicit expectation of restricted use. All persons or legal entities receiving this information shall be deemed by the act of its receipt to have contractually agreed to make no duplications, reproductions of any nature by any means, modifications, disclosures, or use use any portion of this material; except as is expressly authorized in writing by GE Vernova and/or its affiliates.

THIRD ANGLE PROJECTION

Similar To: NONE	Created By: SEONGHWA		MLI No. NONE
First Made For: 1635572	Checked By: VIMAL.V	Approved By: Kim, Chunrae	IEC61355 No. MTC
GE VERNOVA	Document Type: DETAIL DRAWING		Sheet Size A2
	Document Title: PIPE SUPPORT FOR HP STEAM		
Creation Date 2026-01-21	Drawing No. 1635572-1501-PS02	Revision –	Sheet 1 OF 3

ITEM	DESCRIPTION	TYPE OR SIZE	LENGTH(mm)	LENGTH(IN)	QTY.	MATERIAL	WEIGHT(LB)/UNIT	WEIGHT(LB)/TOTAL	REMARK
6	H.S.B/N/2PW	1"-8 UNC-2 3/4"			8	A325	1.54	12.32	NOTE #3
7	H.S.B/N/2PW	1"-8 UNC-3 1/2"			8	A325	1.70	13.60	NOTE #3
8	LUG PLATE	PL10x30x50			8	A387-91	0.26	2.08	NOTE #4

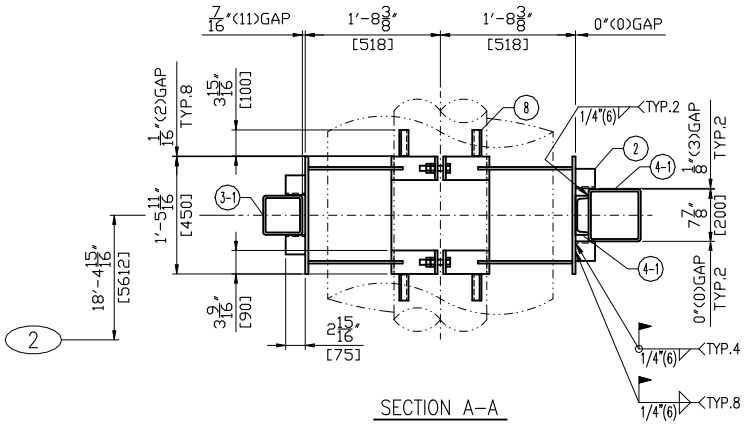

SECTION A-A
(PLAN VIEW N)

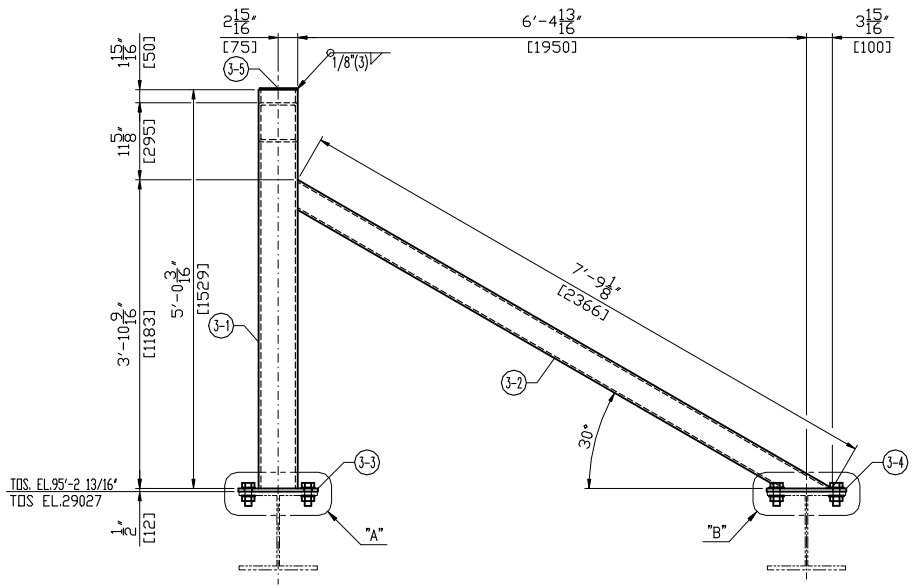

SECTION B-B
LOOKING EAST

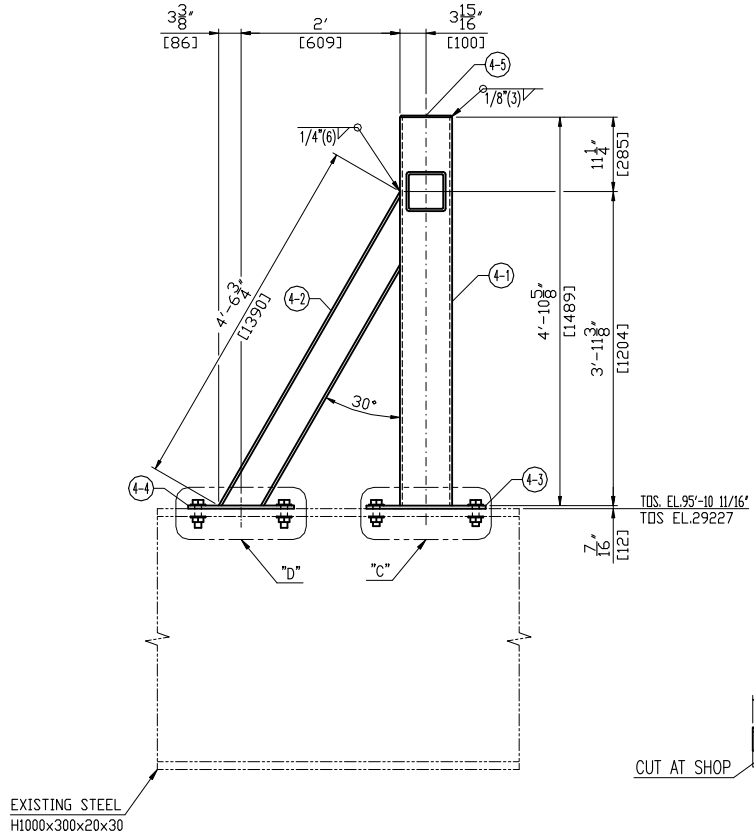

SECTION C-C
LOOKING EAST

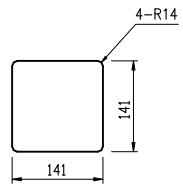

ITEM 4-6

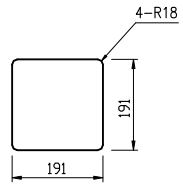

ITEM 3-5

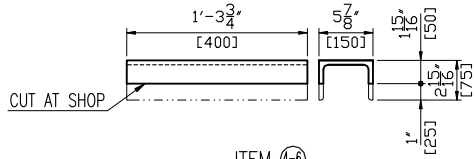

ITEM 4-6

NLR

Copyright © GE Vernova and/or its affiliates 2026
All rights reserved. The information herein is proprietary information of GE Vernova and/or its affiliates.

GE VERNOVA

Document Type: DETAIL DRAWING

Sheet Size: A2

Document Title: PIPE SUPPORT FOR HP STEAM

Creation Date: 2026-01-21

Drawing No.: 1635572-1501-PS02

Revision: –

Sheet: 2 OF 3

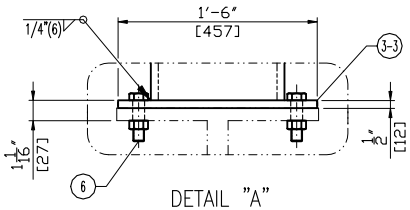

DETAIL "A"

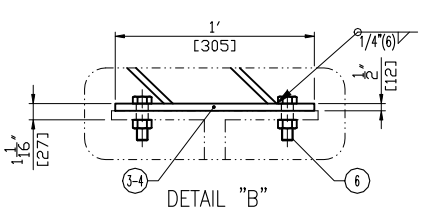

DETAIL "B"

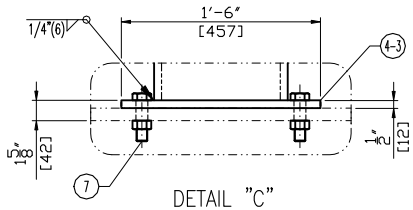

DETAIL "C"

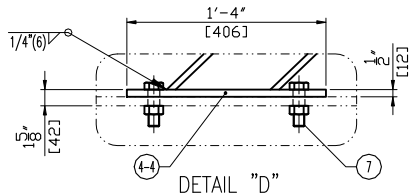

DETAIL "D"

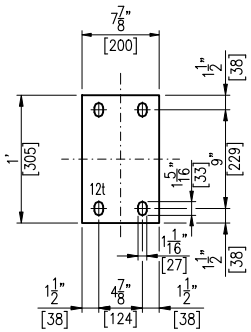

ITEM 3-4

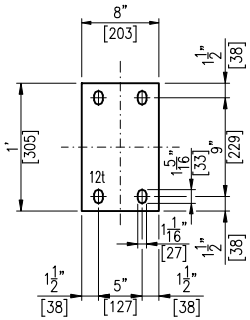

ITEM 3-3

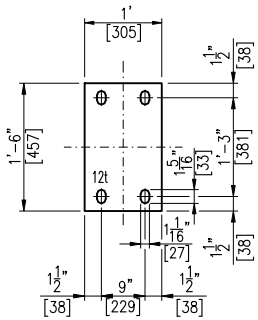

ITEM 4-3

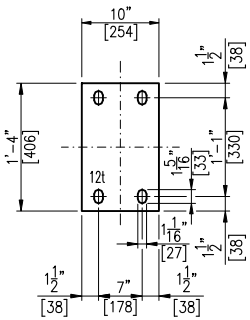

ITEM 4-4

NLR

Copyright© GE Vernova and/or its affiliates 2026
All rights reserved. The information herein is proprietary information of GE Vernova and/or its affiliates.

GE VERNOVA	Document Type: DETAIL DRAWING		Sheet Size A2
	Document Title: PIPE SUPPORT FOR HP STEAM		
Creation Date 2026-01-21	Drawing No. 1635572-1501-PS02	Revision –	Sheet 3 OF 3